POT/I CONVERTERS 300

Moulding enclosure / Assembled in sensor head type

DOERS

- COMPACT MODULE DESIGN
- ANTI-NOISE & DRIFTS MINIMIZES
- 2-WIRE SYSTEM AVAILABLE
- EASY TO ASSEMBLE
- HIGH ACCURACY & RELIABILITY

DIMENSIONS (mm)

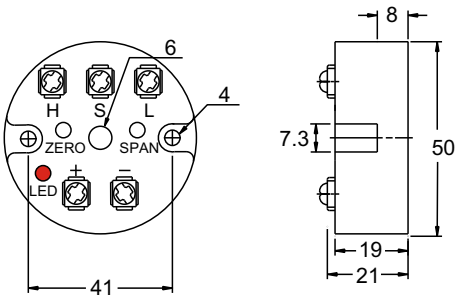

SPECIFICATIONS

Output : 4~20mADC , 2-wire system
Input : Potentiometer 1MΩ max.
Accuracy : ±0.1%F.S.(at 20˚C)
Linearty : ±0.1%F.S.
Burnout protection : upscale 23mA
Power supply : 10~30V DC
Power dog : LED lamp lights up when loop electrified and with erring pole protection
Load resistance : 700Ω at 24V DC
Zero / span adjustment : 0~15% for zero
-20~+60%F.S. for span
(VR screw accessed)
Response time : 0.1sec (0-90%)
Isolation : 250Vrms (Between Input / Output)
Temp. Coefficient : ±0.02%1˚C
Electric protection : EEx ia ⅡC T6
Enclosure : Aluminium alloy with epoxy resined
Wiring terminals : For wires AWG14~22
Ambient temp. : −5~+60˚C , 90%RH max
Mounting : Assembled in sensor head
Weight : Approx.25g (without head)

WIRING CONNECTIONS

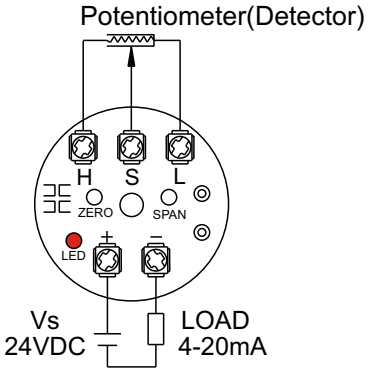

MODEL SELECTIONS

ITEMS	CODE	SPECIFICATIONS
① MODEL	300A	Without sensor head
	300B	Assembled in sensor head
	300C	To be specified
② SENSOR HEAD	−0	None (module only)
	−1	IP68 , 1/2"PT(F)
	−2	EExd ⅡB T4 , IP68 , 1/2"PT(F)
	−3	To be specified
③ INPUT	01 ~ 99	0~1KΩ ~ 0~99KΩ
	00	To be specified
④ OUTPUT	−A	4~20mA DC(2-wire system)
	−B	To be specified
⑤ OPTIONAL INDICATOR	A	Not required
	B	Analog indicator
	C	LCD indicator
	D	To be specified
⑥ OPTIONAL DETECTOR	A	Not required
	B	Required
	C	To be specified

DOERS TECHNOLOGY CORPORATION
4F, NO. 1, LANE 11, TZU CHIANG STREET, TU-CHENG INDUSTRIAL DISTRICT, TAIPEI HSIEN, TAIWAN 236, R. O. C.
Website : www.doers.com.tw
e-mail : doers.tech@msa.hinet.net
TEL : 886-2-22682689
FAX : 886-2-22681248

The specifications are subject to change without prior notice.

EQA ICC ANAB
ISO 9001 : 2000
Certificate No. EQAICC-Q-R5164

POT/I CONVERTERS 310

Moulding enclosure / Assembled in sensor head type

DOERS

SPECIFICATIONS

Output : 4~20mADC , 2-wire system
Input : Potentiometer 1MΩ max.
Accuracy : ±0.1%F.S.(at 20˚C)
Linearty : ±0.1%F.S.
Burnout protection : upscale 23mA
Power supply : 10~30V DC
Power dog : LED lamp lights up when loop electrified
and with erring pole protection
Load resistance : 700Ω at 24V DC
Zero / span adjustment : 0~15% for zero
-20~+60%F.S. for span
(VR screw accessed)
Response time : 0.1sec (0-90%)
Isolation : 250Vrms (Beween Input / Output)
Temp. Coefficient : ±0.02%1˚C
Electric protection : EEx ia ⅡC T6
Enclosure : Aluminium alloy with epoxy resined
Wiring terminals : For wires AWG14~22
Ambient temp. : −5~+60℃ , 90%RH max
Mounting : Assembled in sensor head
Weight : Approx.25g (without head)

- COMPACT MODULE DESIGN
- ANTI-NOISE & DRIFTS MINIMIZES
- 2-WIRE SYSTEM AVAILABLE
- EASY TO ASSEMBLE
- HIGH ACCURACY & RELIABILITY

DIMENSIONS (mm)

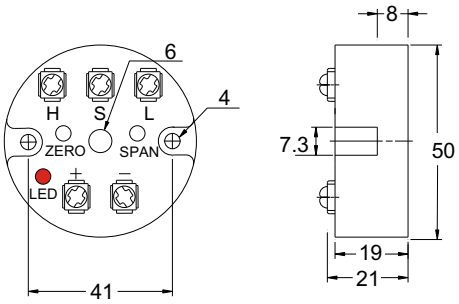

WIRING CONNECTIONS

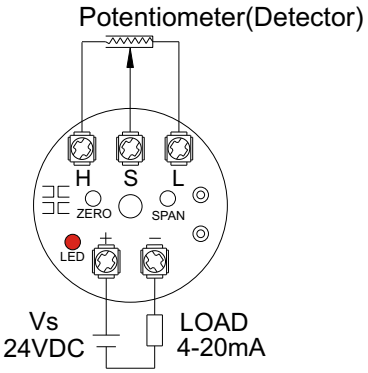

MODEL SELECTIONS

ITEMS	CODE	SPECIFICATIONS
① MODEL	310A	Without sensor head
	310B	Assembled in sensor head
	310C	To be specified
② SENSOR HEAD	−0	None (module only)
	−1	IP68 , 1/2"PT(F)
	−2	EExd ⅡB T4 , IP68 , 1/2"PT(F)
	−3	To be specified
③ INPUT	01 ~ 99	0~1KΩ ~ 0~99KΩ
	00	To be specified
④ OUTPUT	−A	4～20mA DC(2-wire system)
	−B	To be specified
⑤ OPTIONAL INDICATOR	A	Not required
	B	Analog indicator
	C	LCD indicator
	D	To be specified
⑥ OPTIONAL DETECTOR	A	Not required
	B	Required
	C	To be specified

DOERS TECHNOLOGY CORPORATION
4F, NO. 1, LANE 11, TZU CHIANG STREET, TU-CHENG
INDUSTRIAL DISTRICT, TAIPEI HSIEN, TAIWAN 236, R. O. C.
Http : //www.doers.com.tw
e-mail : doers.tech@msa.hinet.net
TEL : 886-2-22682689
FAX : 886-2-22681248

The specifications are subject to change without prior notice.